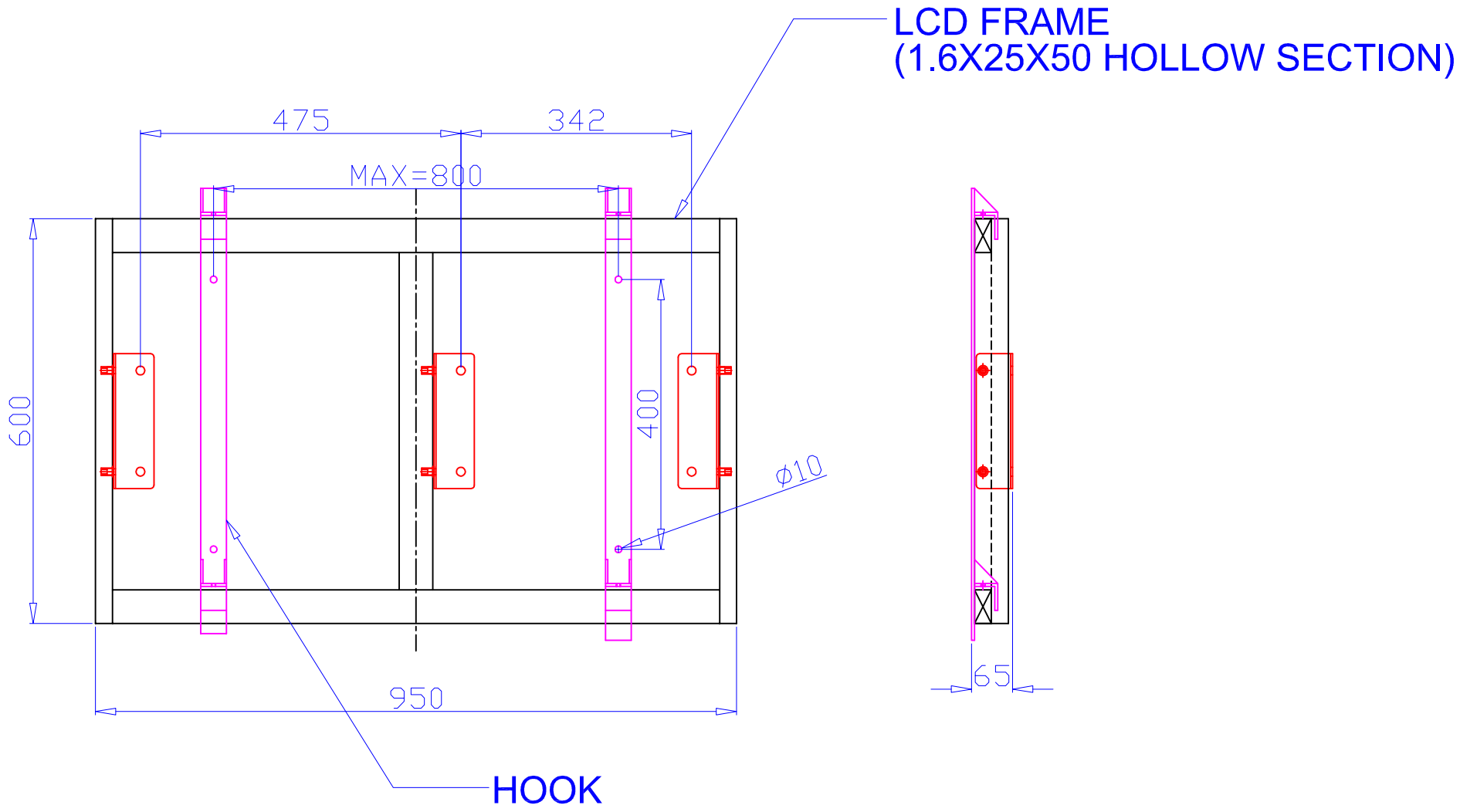

WALL MOUNT BRACKET